A framework for the development of applications allowing Multimodal Interaction with Virtual Reality worlds

Héctor Olmedo,
Valentín Cardeñoso,
David Escudero

Universidad de Valladolid

The 16-th International Conference in Central Europe on Computer Graphics, Visualization and Computer Vision'2008 (Plzen. February 4 - 7, 2008)

Introduction

1. **Context and motivation**
2. **XMMVR2 language**
3. **AAMMVR platform**
4. **Conclusions and future work**

Context and motivation

Components of our system:

- **3D worlds**
- **Graphical interaction (GUI)**
- **Vocal interacción (VUI)**

The goal is the definition of:

- **A multimodal arquitecture**
- **A mark-up language to integrate the description of 3D worlds and the multimodal interaction**

Lack of mark-up language for 3D+VUI+GUI

XMMVR2 Language

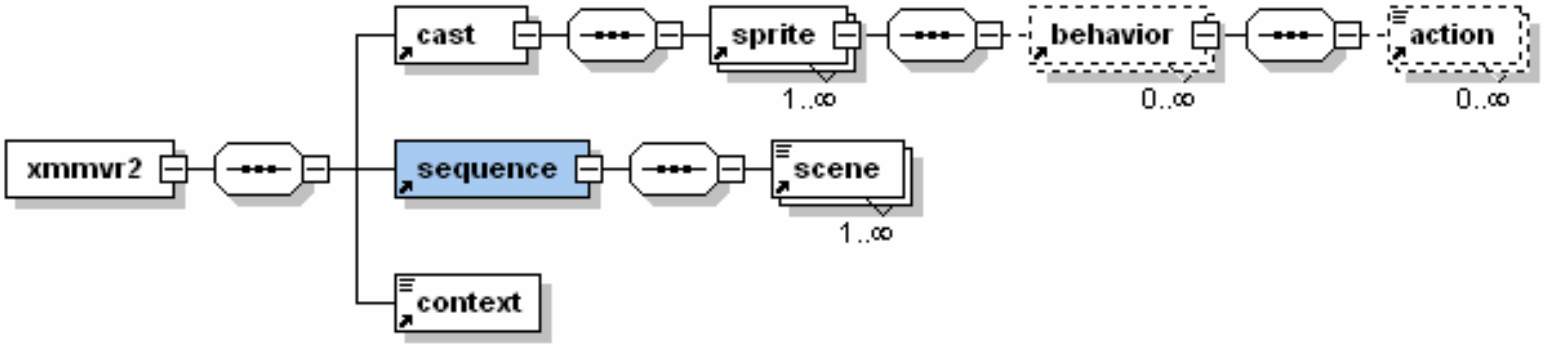

Movie: xmmvr2

- **Cast: sprites -> actors**
  - **Behavior: event + actions**
- **Sequence: scenes**
- **Context**

AAMMVR platform

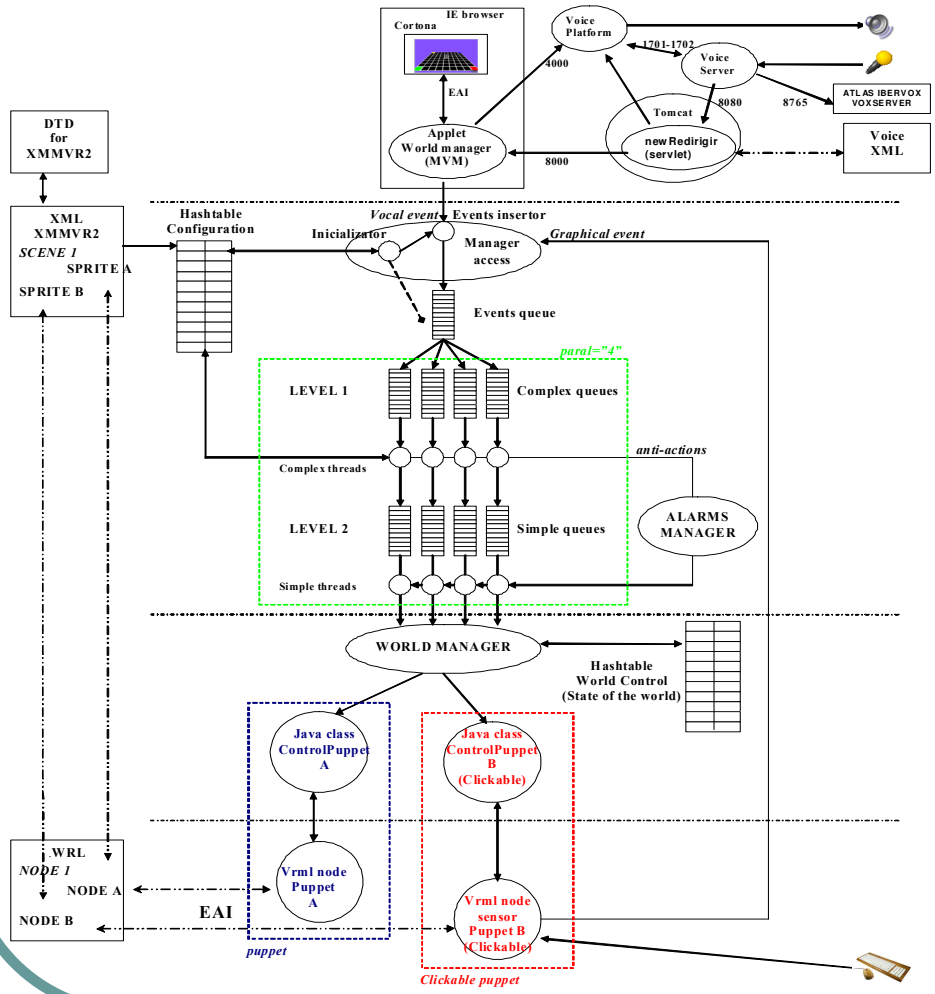

TOP LAYER (DIALOGUE MANAGER): VoiceXML, ATLAS IBERVOX, Apache Tomcat

ACTION MANAGER: JAVA

SCHEDULE

CONTROL

COMMUNICATION AND SYNCHRONIZATION: VRML, CORTONA

Conclusions and future work

Successes:

- **Meta-Script**
- **Event management and flow control**
- **Defined languages, architecture and repository**
- **Modularity, clearness and reutilization**

Future work:

- **Improvements on the language: use of sprites to reuse actors.**
- **Improvements on the architecture: to reduce limitations at event management and flow control and to get W3C MMI Architecture compliance**
- **Integration of other technologies: X3D (graphics) and LOQUENDO (dialog systems).**

Questions

http://www.xmmvr.info

E-mail: holmedo@infor.uva.es