Towards a unified approach between digitizations of linear objects and discrete analytical objects

C. Lincke and C. A. Wüthrich

CoGVis/MMC*
Faculty of Media
Bauhaus University Weimar
99421 Weimar, Germany
{lincke,caw}@medien.uni-weimar.de

ABSTRACT

This paper compares the traditional digitization method as used in Computer Graphics with the arithmetical geometry approach. Digitizations are interpreted as the set of grid points contained in the dilation of a continuous object and a reflected basic domain. We investigate the supercover and derive its analytical description for analytical objects. We prove that the supercover of a convex linear object is a discrete analytical object and provide methods to determine the inequalities defining the supercover.

Keywords: Discrete geometry, n-dimensional raster graphics, digitization, morphology, supercover, arithmetical geometry, discrete analytical objects, polyhedral sets, convex linear objects

1 Introduction

In Computer Graphics, recently many issues have been raised concerning the operations needed by passing between the continuous real world, representable as $\mathbb{R}^n$, and the discrete world of computer raster devices, such as scanners, tomographs, printers and raster screens. There are two ways of doing this passage: reconstruction and digitization.

The digitization of a continuous object is its approximation by a discrete object. Ideally, this approximation should represent important geometric and topological properties of the continuous object. Many digitization algorithms are restricted to a class of objects and a specified mapping of continuous features onto properties of discrete objects. For example, Bresenham's well-known algorithm [Brese65] maps continuous line segments in 2D onto discrete 8-connected arcs. Among many others, algorithms for circular arcs in 2D [Brese77], or line segments, polygons and quadratic objects in 3D [Cohen91] have been published. Since most of these algorithms have been reaching a quite high efficiency, improvements are usually restricted to special cases, e.g. [Linck99], or they are based on special hardware, e.g. [Chen97].

However, the study of topological or geometrical aspects of digitizations is getting more attention. Klette investigated grid point digitizations [Klett85], in particular the *nearest neighbor* and *grid intersection* digitization. Stojmenović and Tošić improved Klette's grid intersection scheme and developed digitization algorithms for lines, hyperplanes and flats in arbitrary dimensions [Stojm91]. The nearest neighbor digitization is also known as the *supercover* digitization or, simply, supercover [Cohen95, Cohen96].

The study of discrete objects as digitization of general Euclidean objects is complex. Reveillès [Revei92] introduced the *arithmetical geometry* approach. He defined *discrete analytical objects* as discrete objects which are the integer solution of a finite set of inequalities. Because of the global description, discrete analytical objects are relatively easy to handle. Reveillès's 2D line definition [Revei92] has been extended to other primitives including discrete analytical hyper-

*Computer Graphics, Visualization, Man-Machine Communication Group

planes [Andre97a] and hyperspheres [Andre97b]. These analytical definitions serve as the theoretical background of image analysis and reconstruction algorithms. For example, Braquelaire and Brun's image segmentation algorithm [Braqu98] is based on the 2D discrete analytical definition line and Françon and Papier's polyhedrization of discrete 3D objects relies on the 3D discrete analytical plane definition [Franç98].

Recently, Andres studied m-flat supercover in the context of discrete analytical objects [Andre98]. Obviously, the supercover of any continuous object and its properties do not depend on the particular approach chosen. In this article we relate the digitization approach to the arithmetical geometry approach.

This paper is structured as follows: section 2 recalls the basic notions and section 3 deals with digitizations in general. Then in section 4 we discuss properties of the supercover and compare it to other digitization schemes. In section 5 an analytical description of convex linear objects, including simplices is developed. We conclude with some remarks on further research.

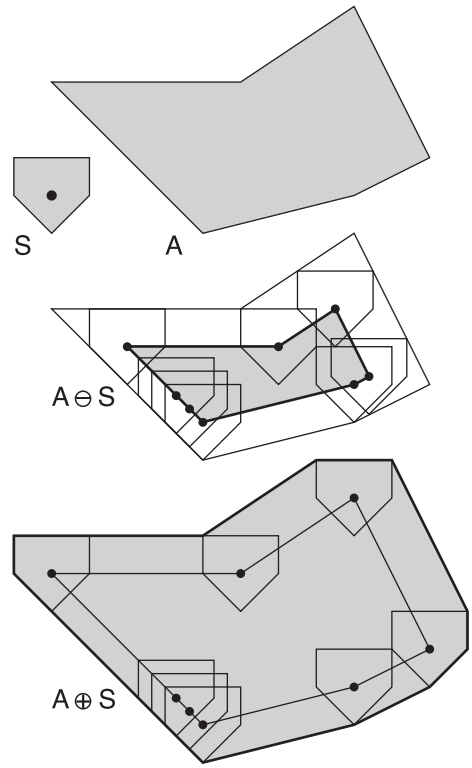

Figure 1: Erosion $A \ominus S$ and dilation $A \oplus S$ of a set A by a structuring Element S

2 Basic definitions

An n-dimensional digital image is an n-dimensional array of integer values. Mathematically, it can be viewed as a function f of a finite subset of $\mathbb{Z}^n$ onto a finite subset of $\mathbb{Z}$. In this paper we consider only binary digital images. These are functions f with the values 0 and 1 only. Consequently, an *object* A is a subset of $\mathbb{Z}^n$, that is $A = \{z \in \mathbb{Z}^n : f(z) = 1\}$.

In many applications a digital image is the discrete representation of some continuous data. Hence, $\mathbb{Z}^n$ is thought of as being embedded in the n-dimensional Euclidean space $\mathbb{R}^n$. An element $z \in \mathbb{Z}^n$ is called a *grid point*. Its *Voronoi set* $\mathbb{V}(z)$ is the set of all points of $\mathbb{R}^n$ which are at least as close to z as to any other grid point. $\mathbb{V}(z)$ is a closed axes-aligned n-dimensional unit cube with center z. The Voronoi sets of a 2D and 3D grid point are known as *pixel* and *voxel*, respectively. Neighboring Voronoi sets can share a point, a straight line segment, up to an $(n-1)$-dimensional cube.

We continue with some general geometrical notions in $\mathbb{R}^n$ [Webst94].

Definition 1. Let $\mathbb{R}^n$ be the Euclidean space and let $x_0, \ldots, x_m \in \mathbb{R}^n$ be $m+1$ $(0 \leq m \leq n)$ linearly independent points. Then the set $\{\lambda_0 x_0 + \ldots + \lambda_m x_m : \lambda_0 + \ldots + \lambda_m = 1\}$ is called *m-flat* and the set $\{\lambda_0 x_0 + \ldots + \lambda_m x_m : \lambda_0 + \ldots + \lambda_m = 1 \wedge \lambda_0, \ldots, \lambda_m \geq 0\}$ is an *m-simplex* in $\mathbb{R}^n$.

An m-flat is an m-dimensional affine subspace of the Euclidean space $\mathbb{R}^n$ and an m-simplex is the convex hull of $m+1$ linearly independent points. A 0-flat, as well as a 0-simplex, is a point, 1-flats are straight lines, 1-simplices are a straight line segments and $(n-1)$-flats are hyperplanes in $\mathbb{R}^n$.

Definition 2. For point sets $A, B \subseteq \mathbb{R}^n$ the *Minkowski addition* $A \oplus B$, the *Minkowski subtraction* $A \ominus B$ are given by

$$A \oplus B = \{a + b : a \in A, b \in B\} \text{ and}$$
$$A \ominus B = \{p : b + p \in A \text{ for all } b \in B\}.$$

The Minkowski addition is associative and commutative and it distributes the union, i.e. $(A \oplus B) \oplus C = A \oplus (B \oplus C)$, $A \oplus B = B \oplus A$ and $(A \cup B) \oplus C = (A \cup C) \oplus (B \cup C)$. In case of the intersection we have only the set inequality $(A \cap B) \oplus C \subseteq (A \cap C) \oplus (B \cap C)$.

In *mathematical morphology* [Serra82, Heijm95], the Minkowski addition and subtractions of an arbitrary set $A \subseteq \mathbb{R}^n$ and a fixed set $S \subseteq \mathbb{R}^n$,

the *structuring element*, are called *dilation* and *erosion* of A by S, respectively, see Fig. 1. We denote $\check{A} = \{-a : a \in A\}$ and $A_z = A \oplus \{z\}$ the reflected set of A and the translate of A by z, and recall two simple, but important properties of dilations [Serra82, Heijm95]:

$$A \oplus \check{S} = \{x : A \cap S_x \neq \emptyset\} \tag{1}$$

$$\text{and} \quad A \oplus \check{S} = \bigcup_{s \in \check{S}} A_s \tag{2}$$

Definition 3. A set $A \subseteq \mathbb{R}^n$ is said to be *convex* if whenever it contains two points, it also contains the line segment joining them. The *convex hull* $\mathrm{conv}(A)$ of a set $A \subseteq \mathbb{R}^n$ is the smallest convex set in $\mathbb{R}^n$ containing A.

We conclude this section with two results for convex sets [Webst94]. The Minkowski addition of $A \oplus B$ of two convex sets A and B is convex and every linear transformation of a convex set is convex.

3 Digitizations

Formally, digitization is mapping subsets of $\mathbb{R}^n$ onto subsets of $\mathbb{Z}^n$. To digitize a continuous object $A \subseteq \mathbb{R}^n$, a fixed set $D \subseteq \mathbb{R}^n$, the so-called *basic domain*, is translated to every point $z \in \mathbb{Z}^n$. A grid point z belongs to the discrete object $\mathrm{Dig}(A)$, iff some specified condition on the intersection $A \cap D_z$ of the object and the translated basic domain is fulfilled.

For example, let us consider binary images produced by hardware devices. On every point of the grid the device obtains a value based on a device-specific domain D and a weighting function. The user can choose a threshold for these values to define which points belong to the discrete object. In our investigations we consider the less general notion of digitization as defined in [Klett85, Wüt98].

Definition 4. A *digitization* $\mathrm{Dig}_D : \wp(\mathbb{R}^n) \to \wp(\mathbb{Z}^n)$ *with the basic domain* $D \subseteq \mathbb{R}^n$ is defined as

$$\mathrm{Dig}_D(A) = \{z \in \mathbb{Z}^n : A \cap D_z \neq \emptyset\}$$

for every continuous object $A \subseteq \mathbb{R}^n$.

The digitization of an object is the set of grid points whose translated basic domain hits the object, see Fig. 2. Obviously, these digitizations are

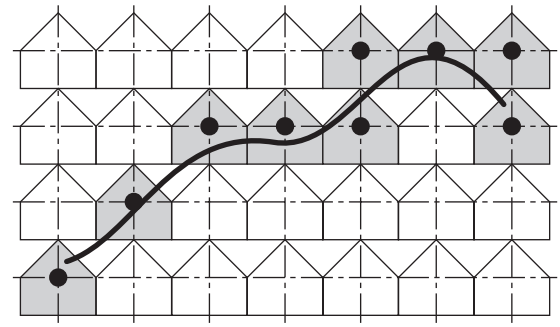

Figure 2: The set of translated basic domains D_z hit by A (shaded)

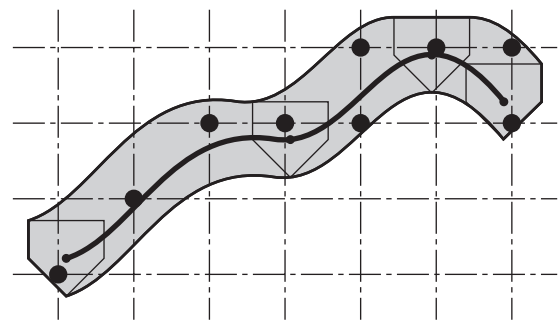

Figure 3: The set of grid points contained in $A \oplus \check{D}$

invariant under translations by vectors with integer coordinates, i.e. $(\mathrm{Dig}_D(A))_z = \mathrm{Dig}_D(A_z)$ for every $A \subseteq \mathbb{R}^n$ and $z \in \mathbb{Z}^n$. It is similarly easy to see that for a fixed basic domain D, the digitization $\mathrm{Dig}_D(A \cup B)$ of the union of two sets $A, B \subseteq \mathbb{R}^n$ is equal to the union $\mathrm{Dig}_D(A) \cup \mathrm{Dig}_D(B)$ of the digitization of these sets. The following property is also fairly simple to prove. Since it is a crucial result for the further investigations, it is emphasized as a theorem.

Theorem 1. *Let* Dig_D *be a digitization with basic domain* D*. Then* $\mathrm{Dig}_D(A) = (A \oplus \check{D}) \cap \mathbb{Z}^n$ *for every* $A \subseteq \mathbb{R}^n$*.*

Proof. The digitization can be written as $\mathrm{Dig}_D(A) = \{x \in \mathbb{R}^n : A \cap D_x \neq \emptyset\} \cap \mathbb{Z}^n$. Using (1) we obtain $\mathrm{Dig}_D(A) = (A \oplus \check{D}) \cap \mathbb{Z}^n$. □

As a consequence the digitization $\mathrm{Dig}_D(A)$ can be interpreted as the set of grid points contained in the dilation of A by $\check{D}$, the reflected basic domain, see Fig. 3.

4 The supercover and its relation to other digitizations

Definition 5. A *supercover* $\mathbb{S}$ is a digitization Dig_D with basic domain $D = \mathbb{V}(0)$.

The supercover is also called *nearest neighbor digitization* [Wüt98], because it maps every point of the continuous object onto the closest grid point. A non-empty continuous object $A \neq \emptyset$ has a non-empty supercover, i.e. $\mathbb{S}(A) \neq \emptyset$, because the union of all translated basic domains covers the Euclidean space:

$$\bigcup_{z \in \mathbb{Z}^n} D_z = \bigcup_{z \in \mathbb{Z}^n} \mathbb{V}(z) = \mathbb{R}^n.$$

As mentioned in section 2, the Voronoi sets of two neighboring grid points are not disjoint. Hence, in case a point belongs to two (or more) Voronoi sets, the supercover of this point consists of two (or more) grid points. The ambiguity of curve digitizations in 2D has been studied by Montanari [Monta70]. He investigated the convergence of curves sequences and proved that there is no digitization scheme possible which avoids ambiguity for general curves. However, for practical purposes digitizations are considered for certain classes of objects. In these cases half-open basic domains, in 3D called *reduced voxels* [Cohen95, Cohen96], are chosen depending on the class of objects to be digitized.

Properties of digitized objects are determined by the choice of the basic domain. Suppose Dig_D and Dig_E are two digitizations with basic domains $D \subseteq E$. Then $\mathrm{Dig}_D(A) \subseteq \mathrm{Dig}_E(A)$ for every $A \subseteq \mathbb{R}^n$. Informally speaking, to obtain "thinner" discrete objects, digitization schemes with "smaller" basic domain have to be chosen.

Stojmenović and Tošić developed a digitization scheme for m-flats, including straight lines and hyperplanes, in arbitrary dimensions [Stojm91]. The basic domain of the digitization of an m-flat is the intersection of a coordinate $(n-m)$-flat and the Voronoi set of the origin. A coordinate k-flat is a k-flat that contains k coordinate axes. This scheme is not independent from the object to be digitized. The choice of the particular $(n-m)$-flat as the basic domain is determined by the orientation of the m-flat. As a consequence, a generalization to arbitrary objects is not a digitization with one fixed basic domain as defined in section 3.

Grid intersection [Klett85] is an appropriate scheme to digitize hyperplanes. The basic domain of these digitizations is the set of all coordinate axes intersected with $\mathbb{V}(0)$. It has been proven that in this case grid intersection and the Stojmenović and Tošić digitization lead to the same discrete set [Stojm91]. For both digitizations the union of all translated basic domains does not cover the Euclidean space. So, the grid intersection, as well as a Stojmenović and Tošić digitization, of an arbitrary non-empty set can be empty.

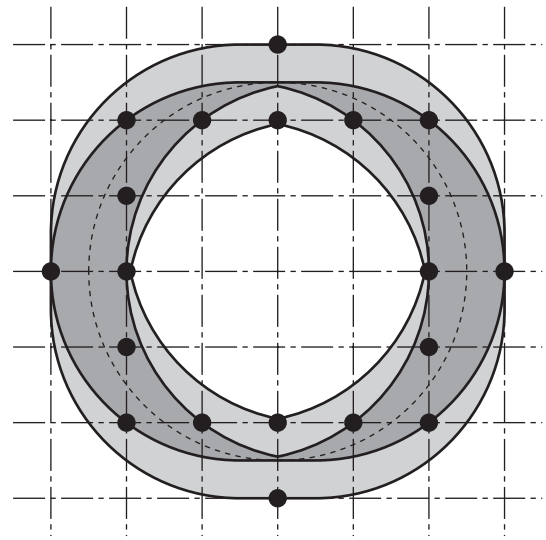

Figure 4: Construction of the supercover of a circle

The next theorem is an important property of the supercover. It is the theoretical background for the following section.

Theorem 2. *Let L_i $(1 \leq i \leq n)$ be the straight line segment obtained by intersecting the i-th coordinate axis with $\mathbb{V}(0)$. The supercover $\mathbb{S}(A)$ of a set $A \subseteq \mathbb{R}^n$ is the set of grid points contained in the successive dilation of A by these line segments:*

$$\mathbb{S}(A) = \mathbb{Z}^n \cap (A \oplus L_1 \oplus \ldots \oplus L_n).$$

Proof. The straight line segments are defined as $L_i = \{(x_1, \ldots, x_n) \in \mathbb{R}^n : x_i \in [-\frac{1}{2}, \frac{1}{2}]$ and $x_j = 0$ for $j \neq i\}$. In particular

$$L_1 = \left[-\frac{1}{2}, \frac{1}{2}\right] \times \{0\}^{n-1}.$$

Using the definition of the Minkowski addition we obtain inductively

$$L_1 \oplus L_2 = \left[-\frac{1}{2}, \frac{1}{2}\right]^2 \times \{0\}^{n-2}$$

$$\vdots$$

$$L_1 \oplus \ldots \oplus L_n = \left[-\frac{1}{2}, \frac{1}{2}\right]^n.$$

Hence, the basic domain of the supercover can also be written as $D = L_1 \oplus \ldots \oplus L_n$. To complete the proof theorem 1 is used for the initial condition. □

The importance of this theorem will be illustrated on the example of a circle C in $\mathbb{R}^2$, see Fig. 4. First C is dilated by the line segment L_1. The result (the darker shaded area) is then dilated by L_2. Finally, the supercover $\mathbb{S}(C)$ is the set of all integer points in $C \oplus L_1 \oplus L_2$ (the whole shaded area).

If an object $A \subseteq \mathbb{R}^n$ is given analytically, i.e. as the solution of a system of analytical inequalities, it can be written as $A = A(x_1, \ldots, x_n)$. By (2) we obtain

$$A \oplus L_1 = \bigcup_{-\frac{1}{2} \leq t_1 \leq \frac{1}{2}} A(x_1 - t_1, x_2, \ldots, x_n).$$

and consequently

$$A \oplus \mathbb{V}(0) = \bigcup_{-\frac{1}{2} \leq t_1, \ldots, t_n \leq \frac{1}{2}} A(x_1 - t_1, \ldots, x_n - t_n).$$

As a result, the supercover of a continuous analytical object $A = A(x_1, \ldots, x_n)$ is

$$\mathbb{S}(A) = \mathbb{Z}^n \cap \bigcup_{-\frac{1}{2} \leq t_1, \ldots, t_n \leq \frac{1}{2}} A(x_1 - t_1, \ldots, x_n - t_n).$$

5 The supercover of convex linear objects

The importance of convex linear objects in Computer Graphics does not need to be stressed. It is common to approximate continuous objects by linear objects and it is well-known that linear objects can be decomposed into convex linear objects.

Definition 6. A *halfspace* of $\mathbb{R}^n$ is the solution of a linear inequality

$$a_1 x_1 + \ldots + a_n x_n \leq a_0$$

for some $a_0, \ldots, a_n \in \mathbb{R}$, where not all $a_1, \ldots, a_n$ are zero. A *convex linear object* is the intersection of a finite family of closed halfspaces.

In geometry, convex linear objects are also called *polyhedral sets* [Webst94]. The intersection of $\mathbb{Z}^n$ and a polyhedral set can be seen as the integer solution of a finite family of linear inequalities. Hence, it is a special *discrete analytical object* [Andre98], that is the integer solution of a set of analytical inequalities in $\mathbb{R}^n$.

Definition 7. The i-th extrusion $\epsilon_i(A)$ of a set $A \subseteq \mathbb{R}^n$ is defined as

$$\epsilon_i(A) = \{(x_1, \ldots, x_n) \in \mathbb{R}^n : \exists x_i^* \in \mathbb{R} \text{ such that } (x_1, \ldots, x_{i-1}, x_i^*, x_{i+1}, \ldots, x_n) \in A\}.$$

The i-th extrusion of $A \subseteq \mathbb{R}^n$ is the union of all translates of A along the i-th coordinate axis. It is the composition of the i-th projection π_i and the inverse of the i-th projection. The i-th projection, a mapping of every point $(x_1, \ldots, x_n) \in A$ onto an $(n-1)$-dimensional point $(x_1, \ldots, x_{i-1}, x_{i+1} \ldots, x_n) \in \mathbb{R}^{n-1}$, is clearly a linear transformation. The inverse of a set $B \in \mathbb{R}^{n-1}$ is the subset of $\mathbb{R}^n$. It is defined as

$$\pi_i^{-1}(B) = \{(x_1, \ldots, x_n) \in \mathbb{R}^n : (x_1, \ldots, x_{i-1}, x_{i+1}, \ldots, x_n) \in B\}.$$

Consequently, the i-th extrusion $\epsilon_i(A)$ of a convex set is convex, and $\epsilon_i(A)$ of a polyhedral set is a polyhedral set.

As a consequence of theorem 2 the investigation of the supercover is actually a study of dilations by line segments L_i.

Theorem 3. *Let A be a convex linear object determined by m linear inequalities*

$$\sum_{j=1}^n a_{1,j} x_j \leq a_{1,0}$$
$$\vdots$$
$$\sum_{j=1}^n a_{m,j} x_j \leq a_{m,0}$$

The dilation $A \oplus L_i$ is a convex linear object and it holds $A \oplus L_1 = \epsilon_i(A) \cap \theta_i(A)$, where $\theta_i(A)$ is defined as the solution of the inequalities

$$\sum_{j=1}^n a_{1,j} x_j \leq a_{1,0} + \frac{|a_{1,j}|}{2}$$
$$\vdots$$
$$\sum_{j=1}^n a_{m,j} x_j \leq a_{m,0} + \frac{|a_{m,j}|}{2}$$

Proof. Without loss of generality we choose $i = 1$ and $L_1 = [-\frac{1}{2}, \frac{1}{2}] \times \{0\}^{n-1}$. By (2) the dilation $A \oplus L_1$ is the union of all translates A_t for $t \in L_1$. Since A and L_1 are both convex, $A \oplus L_1$ is convex.

A is the intersection of m halfspaces $H_1, \ldots, H_m$, each of them is one of the solutions of the inequalities that define A. Let us consider one of the halfspaces. Without loss of generality, we choose H_1, given by

$$\sum_{j=1}^n a_{1,j} x_j \leq a_{1,0}$$

$H_1 \oplus L_1$ is $H_1(x_1 - t_1, \ldots, x_n)$ for $-\frac{1}{2} \leq t_1 \leq \frac{1}{2}$. Hence,

$$\sum_{j=1}^n a_{1,j} x_j \leq a_{1,0} + a_{1,1} t_1$$

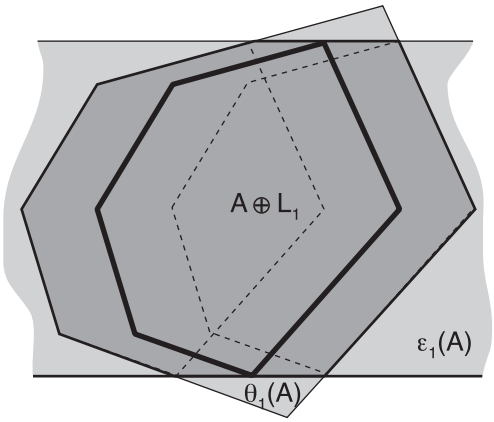

Figure 5: $A \oplus L_1$ is the intersection of $\epsilon_1(A)$ and $\theta_1(A)$

for all t_1 with $|t_1| \leq \frac{1}{2}$ and finally

$$\sum_{j=1}^{n} a_{1,j} x_j \leq a_{1,0} + \frac{|a_{1,j}|}{2}.$$

Therefore $\theta_i(A) = H_1 \oplus L_1 \cap \ldots \cap H_m \oplus L_1$ and $A \subseteq \theta_i(A)$ It is obvious by the definition of the extrusion, that $A \oplus L_1$ is a subset of $\epsilon_i(A)$. Consequently, we have $A \oplus L_1 \subseteq \epsilon_i(A) \cap \theta_i(A)$.

Finally, we prove $\epsilon_1(A) \cap \theta_1(A) \subseteq A \oplus L_1$. Suppose that $x \in \mathbb{R}^n$ is a point with $x \in \epsilon_1(A)$. Then x is contained in one translate A_t along the first coordinate axis. If we further suppose $x \in \theta_1(A)$, it remains to show that there exists a translation vector $t^* = (t_1^*, 0, \ldots, 0)$ with $-\frac{1}{2} \leq t_1^* \leq \frac{1}{2}$ such that $A_{t^*} \subseteq A \oplus L_1$. The cases $x \in A \oplus (-\frac{1}{2}, 0, \ldots, 0)$ and $x \in A \oplus (\frac{1}{2}, 0, \ldots, 0)$ are trivial. Otherwise $\epsilon_1(x)$, the line through x parallel to the first coordinate axis must hit $x \in A \oplus (-\frac{1}{2}, 0, \ldots, 0)$ and $x \in A \oplus (\frac{1}{2}, 0, \ldots, 0)$ in some points x^- and x^+, respectively. Since $x \in \theta_i(A)$, we have $x^- \leq x \leq x^+$. Thus, there exists a t^* which satisfies the assumptions.

Now, we have proven $A \oplus L_1 = \epsilon_i(A) \cap \theta_i(A)$, which is, as being the intersection of two polyhedral sets, a polyhedral set and can be written as the intersections of the halfspaces defining $\epsilon_1(A)$ and the halfspaces defining $\theta_1(A)$. □

It is easy to see that $A \oplus L_1$ is the convex hull of $A \oplus (-\frac{1}{2}, 0, \ldots, 0) \cup A \oplus (\frac{1}{2}, 0, \ldots, 0)$. The construction of $A \oplus L_1$ is illustrated in Fig. 5. To determine $A \oplus \mathbb{V}(0)$, one has to determine $A \oplus L_1$, $A \oplus L_1 \oplus L_2$, ..., $A \oplus L_1 \oplus \ldots \oplus L_n$ inductively.

Our result includes m-flats ($0 \leq m < n$) as a special case. As an example we consider the supercover of a hyperplane H, i.e. an $(n-1)$-flat, given by the equation

$$a_1 x_1 + \ldots + a_n x_n = a_0.$$

Since all the extrusions of H are the set $\mathbb{R}^n$, we derive $H \oplus L_1 = \theta_1(H)$, $H \oplus L_1 \oplus L_2 = \theta_2(\theta_1(H)$ and so on. The supercover of a hyperplane is $\mathbb{S}(H) = \mathbb{Z}^n \cap \theta_n \circ \ldots \circ \theta_1(H)$, which is the discrete solution of

$$a_0 - \sum_{j=1}^{n} \frac{|a_j|}{2} \leq \sum_{j=1}^{n} a_j x_j \leq a_0 + \sum_{j=1}^{n} \frac{|a_j|}{2}.$$

We want to remark that our approach is different from the approach by Andres [Andre98], who studied m-flats only. He defined the set of *multi-indices*

$$\mathbb{J}_m^n = \{j = (j_1, \ldots, j_m) \in \mathbb{Z}^n : \\ 1 \leq j_1 < j_2 < \ldots < j_m \leq n\}$$

and a more general notion of projection and extrusion as

$$\pi_j(A) = (\pi_{j_1} \circ \pi_{j_2} \circ \ldots \circ \pi_{j_m})(A) \\ \text{and } \epsilon_j(A) = \pi_j^{-1}(\pi_j(A))$$

for $A \subseteq \mathbb{R}^n$ and $j \in \mathbb{J}_m^n$. The supercover of an m-flat A with $0 \leq m \leq n-2$ is determined by

$$\mathbb{S}(A) = \bigcap_{j \in \mathbb{J}_{n-1-m}^n} \mathbb{S}(\epsilon_j(A)).$$

The supercover of an extrusion $\mathbb{S}(\epsilon_j(A))$ is given by the supercover of the according projection $\mathbb{S}(\pi_j(A))$. Based on this, Andres developed a recursive method.

Our computation of the supercover of a general polyhedral set A in n-dimensional space requires n steps. The result of the i-th step will be denoted by A_i and $A_0 = A$. In each step, we compute

$$A_i = \epsilon_i(A_{i-1}) \cap \theta_1(A_{i-1}).$$

The number of inequalities in $\epsilon_i(A_{i-1})$ is clearly the same as that of A_{i-1}. The number of inequalities in $\theta_1(A_{i-1})$ depends on A_{i-1}. For example, the i-th extrusion of a tetrahedron can be defined by three or four inequalities, depending on the number of vertices in the i-th projection.

Fig. 6 shows the construction of the supercover of a triangle in 3D. The supercover of a triangle in general location, that is a triangle which is not parallel to a coordinate plane and whose edges are not axis aligned, is given by 17 discrete inequalities.

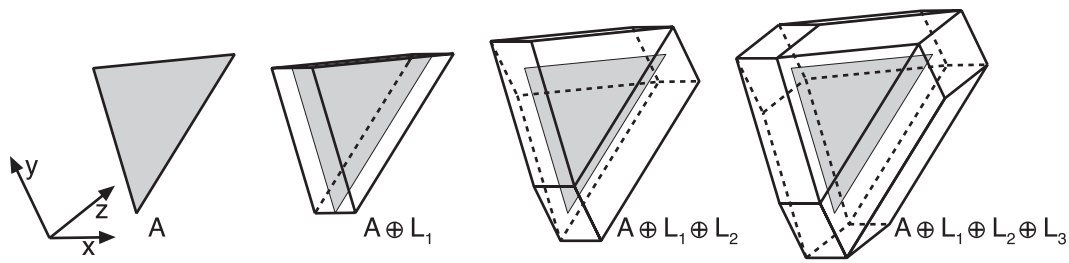

Figure 6: The construction of the supercover of a triangle in 3D

Alternatively to the inductive approach, the fact that $A \oplus \mathbb{V}(0)$ is the convex hull of the dilation of A by the set of vertices of $\mathbb{V}(0)$

$$\mathrm{conv}(A \oplus \cup \left\{ (x_1, \ldots, x_n) : |x_j| = \frac{1}{2} \right\})$$

can be incorporated to compute the supercover. A bounded polyhedral set is a convex polyhedron. Its supercover is the convex hull of the dilation of its vertices and the vertices in $\mathbb{V}(0)$.

6 Conclusions and future work

In this article we have investigated the digitization approach to discrete geometry and related it to the arithmetical geometry approach. We pointed out that digitization as defined in [Klett85] can be interpreted as the set of grid points contained in the dilation of the continuous object and the reflected basic domain. This relationship serves as the theoretical background for the study of the supercover.

One important property of the supercover digitization is the decomposability of its basic domain into Minkowski sums of axis aligned straight line segments. As a consequence, the study of the supercover is reduced to the investigation of dilations by these line segments.

We have shown that the supercover of a continuous analytical object $A = A(x_1, \ldots, x_n)$ is

$$\mathbb{S}(A) = \mathbb{Z}^n \cap \bigcup_{-\frac{1}{2} \leq t_1, \ldots, t_n \leq \frac{1}{2}} A(x_1 - t_1, \ldots, x_n - t_n)$$

However, it is far from being trivial to derive an analytical description of the supercover of general analytical objects $A = A(x_1, \ldots, x_n)$ as a set of inequalities whose solution is $\mathbb{S}(A)$. The paper makes a first step into the right direction.

In the previous section the supercover of polyhedral sets, i.e. convex linear objects, is considered. It has been proven that the supercover of these objects is a discrete analytical object. This proof relies on convexity. Since concave linear objects can be partitioned into polyhedral sets and the digitization of the union of two objects is the union of the digitization of each object, an extension to concave linear objects is straight forward.

This paper is a small move towards a unification between the digitization approach and the discrete analytical approach. Consequently, there are many aspects open for further research. It is worthwhile to consider also other classes of continuous objects, in particular objects defined by polynomial inequalities. On a more abstract level, other digitization scheme can be studied similarly.

Here, we began to study how discretization can be viewed in the context of arithmetical geometry. Conversely, we want to consider discrete analytical objects and investigate their relation to digitization schemes. Moreover, these considerations can also be made with the axiomatic approach to digital geometry. The idea behind this is to find common properties as a foundation of a unified approach.

Acknowledgements: The authors would like to thank Eric Andres for the discussions concerning supercover and discrete analytical objects.

REFERENCES

[Andre97a] E. Andres, R. Acharya, and C. Sibata. Discrete analytical hyperplanes. *Graphical models and image processing: GMIP*, 59(5):302–309, 1997.

[Andre97b] E. Andres and M.-A. Jacob. The Discrete Analytical Hyperspheres. *IEEE Transactions on Visualization and Computer Graphics*, 3(1):75–86, March 1997.

[Andre98] E. Andres. An m-flat supercover is a discrete analytical object. Internal Research Report 1998-07, Laboratory

IRCOM-SIC, University of Poitiers, 1998. submitted to Theoretical Computer Science.

[Braqu98] J. P. Braquelaire and L. Brun. Image segmentation with topological maps and inter-pixel representation. *Journal of Visual Communication and Image representation*, 9(1):62–79, 1998.

[Brese65] J. E. Bresenham. Algorithm for computer control of a digital plotter. *IBM System Journal*, 4(1):25–30, 1965.

[Brese77] J. E. Bresenham. A linear algorithm for incremental digital display of circular arcs. *Communications of the ACM*, 20(2):100–106, 1977.

[Chen97] J. X. Chen. Multiple segment line scan-conversion. *Computer Graphics Forum*, 16(5):257–268, 1997.

[Cohen91] D. Cohen and A. Kaufman. Scan conversion algorithms for linear and quadratic objects. In A. Kaufman, editor, *Volume Visualization*, pages 280–300. IEEE Computer Science Press, 1991.

[Cohen95] D. Cohen-Or and A. Kaufman. Fundamentals of surface voxelization. *GMIP*, 57(6):453–461, November 1995.

[Cohen96] D. Cohen-Or, A. Kaufman, and T. Y. Kong. On the soundness of surface voxelization. In T. Y. Kong and A. Rosenfeld, editors, *Topological Algorithms For Image Processing*, pages 181–204, 1996.

[Franç98] J. Françon and L. Papier. Polyhedrization of the boundary of a voxel. In *Discrete Geometry for Computer Imagery (Proceedings of the 8th DCGI)*, volume 1568 of *Lecture Notes in Computer Science*, pages 425–434. Springer-Verlag, 1998.

[Heijm95] H. J. A. M. Heijmans. Mathematical morphology: basic principles. In *Proceedings of Summer School on "Morphological Image and Signal Processing"*, Zakopane, Poland, 1995.

[Klett85] R. Klette. The m-dimensional grid point space. *Computer Vision, Graphics, and Image Processing*, 30:1–12, 1985.

[Linck99] C. Lincke, C. A. Wüthrich, and P. Guitton. An exact weaving rasterization algorithm for digital planes. In V. Skala, editor, *Proceedings of the WSGG '99*, pages 395–402, Plzen, Czech Republic, 1999. University of West Bohemia.

[Monta70] G. U. Montanari. On limit properties in digitization schemes. *Journal of the ACM*, 17(2):348–360, April 1970.

[Revei92] J.-P. Reveillès. *Geometrie Discrète, Calcul en Nobres Entiers et Algorithmique.* Thèse d'Etat. Université Louis Pasteur, Strasbourg, F, 1992.

[Serra82] J. Serra. *Image Analysis and Mathematical Morphology.* Academic Press, London, 1982.

[Stojm91] I. Stojmenović and R. Tošić. *Digitization Schemes and Recognition of Digital Straight Lines, Hyperplanes and Flats in Arbitrary Dimensions*, volume 119 of *Contemporary Math. Series*, pages 197–212. American Mathematical Society, Providence, RI, 1991.

[Webst94] R. Webster. *Convexity.* Oxfort University Press, 1994.

[Wüt98] Ch. A. Wüthrich. A model for curve rasterization in n-dimensional space. *Computer & Graphics*, 22(2–3):153–160, 1998.